Revision Notes.				
R1 -				
APA: -	Drawn:-	Checked:-	Approved:-	Date: -

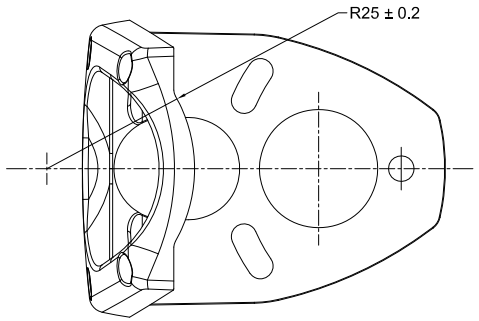

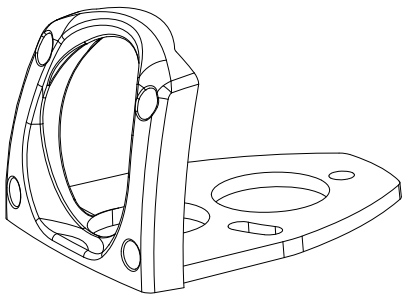

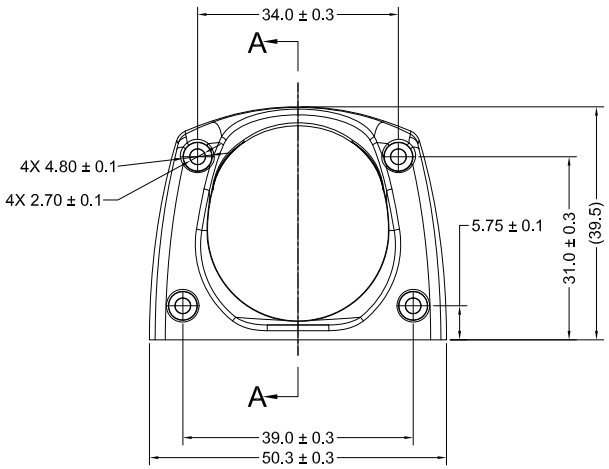

SECTION A-A

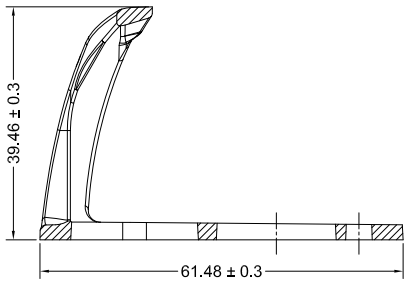

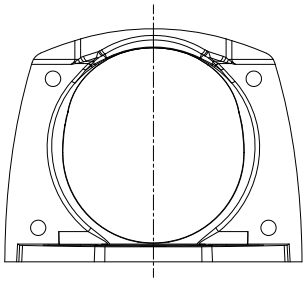

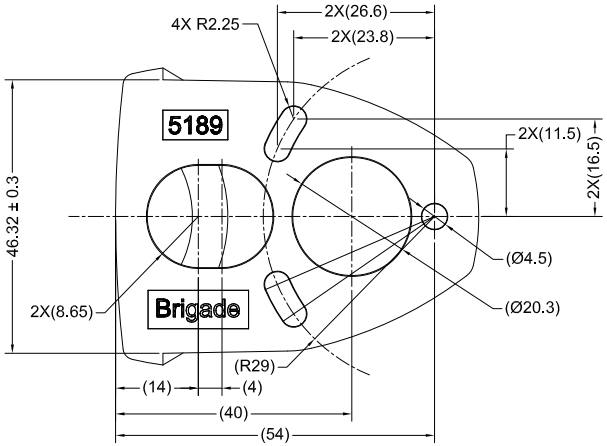

NOTES:
1. COLOUR BLACK.
2. MATERIAL: ALUMINUM GRADE ADC12.
3. SURFACE TREATMENT: POWDER COATING, MATT SURFACE.
4. NO BURS, NO STRAINS & NO SHARP CORNERS ON ANY FACE.
5. REFER TO ASSEMBLY PLANT DRAWING SV01409 REV 0 FOR DETAILED DIMENSIONS.
6. PART MUST NOT BE DEFORMED AND WARPED.
7. ALL DIMENSIONS MARKED WITH ** ARE KEY DIMENSIONS.
8. ALL DIMENSIONS ARE BEFORE SURFACE TREATMENT APPLIED.

PROPRIETARY NOTICE
THIS DESIGN AND TECHNICAL INFORMATION APPEARING ON THIS DRAWING IS THE PROPERTY OF BRIGADE ELECTRONICS, AND IS DISCLOSED IN CONFIDENCE. IT IS NOT TO BE COPIED, REPRODUCED, REVEALED TO OR EXPROPRIATED BY OTHERS, EITHER IN WHOLE OR IN PART WITHOUT THE EXPRESS WRITTEN CONSENT OF BRIGADE ELECTRONICS.

BRIGADE®
www.brigade-electronics.com

Assembly Pl Approval	Approved by	Checked by	Drawn by
SHILONG SONG (08/12/16)	B.JOHN	R.PENTLEY	M.BUTLER

Angle of Projection	Units	Scale	Released	Assembly Ref
Third Angle	mm	N/A	08/12/16	32030000471

Status	VBV-3XXC-FH
RELEASED	
Part No 5189	BE-003458-00-16

FrameV3